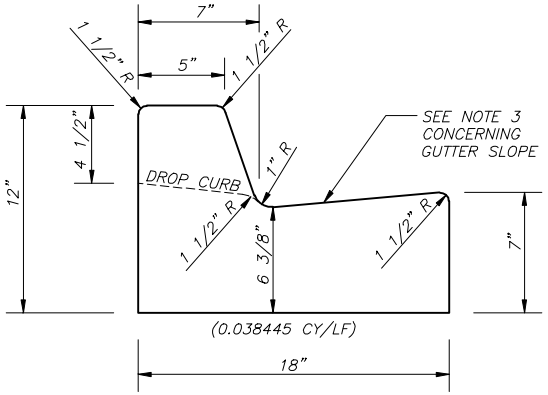

18" CURB & GUTTER

SPECIFIC USE: LOCAL ROAD AND MINOR COLLECTOR ROADWAY CLASSES

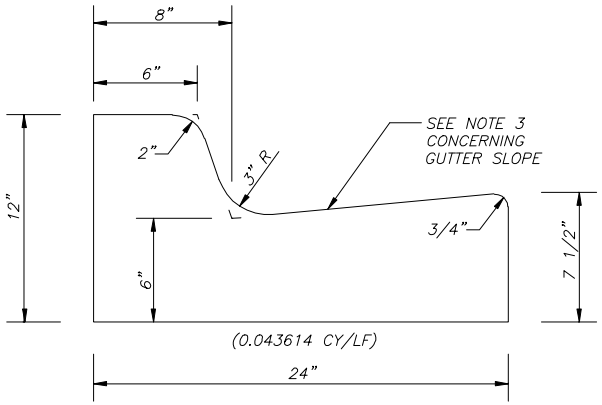

F.D.O.T. STANDARD TYPE "F" CURB AND GUTTER

SPECIFIC USE: MAJOR COLLECTOR ROADWAY CLASSES

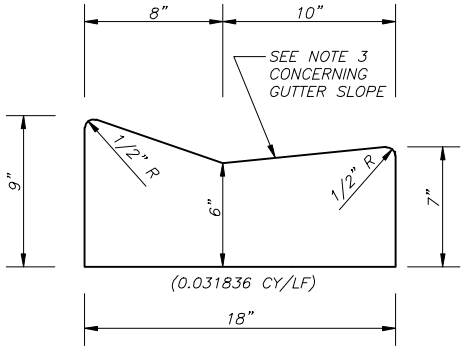

18" LOW PROFILE CURB & GUTTER

SPECIFIC USE: LOCAL ROAD AND MINOR COLLECTOR ROADWAY CLASSES

GENERAL NOTES:

1. MATERIALS AND CONSTRUCTION SHALL CONFORM TO THE FDOT STANDARD SPECIFICATIONS FOR ROAD AND BRIDGE CONSTRUCTION.
2. CONCRETE SHALL BE CLASS I CONCRETE WITH A MINIMUM 28 DAY COMPRESSIVE STRENGTH OF 3000 PSI.
3. WHEN USED ON THE HIGH SIDE OF ROADWAY SECTIONS, THE CROSS SLOPE OF THE GUTTER SHALL MATCH THE CROSS SLOPE OF THE ADJACENT PAVEMENT. WHERE THIS CONDITION IS ENCOUNTERED, THE FRONT FACE VERTICAL DIMENSION SHALL REMAIN AS SHOWN FOR NORMAL SECTIONS SHOWN HEREON.

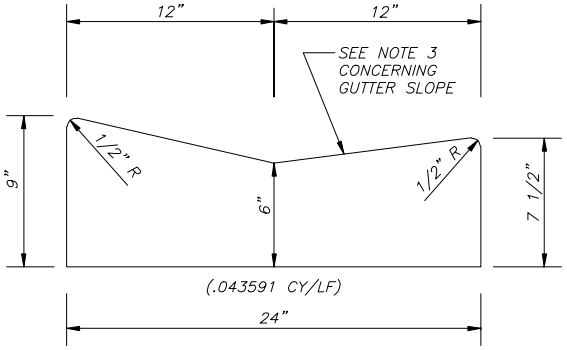

24" LOW PROFILE CURB AND GUTTER

SPECIFIC USE: MAJOR COLLECTOR ROADWAY CLASSES

ST JOHNS COUNTY
PUBLIC WORKS DEPARTMENT
ENGINEERING DIVISION
2740 Industry Center Road
ST AUGUSTINE, FLORIDA 32084
Phone (904) 209-0110 • Fax. (904) 209-0140

REVISION
10/09

DESIGN DETAIL

CURB AND CURB & GUTTER
TYPICAL CONSTRUCTION DETAILS

EFFECTIVE DATE:

DETAIL NO. 115

APPROVED:

H.P. TOMPKINS, JR., P.E.
COUNTY ENGINEER

FILE NAME: D115.DWG